GTX SETUP SHEET

NAME _____
DATE _____
TRACK _____

TRACK CONDITION

SURFACE	◯ SMOOTH	◯ MEDIUM	◯ BUMPY
SIZE	◯ TIGHT	◯ MEDIUM	◯ FAST
TRACTION	◯ LOW	◯ MEDIUM	◯ HIGH

TRANSMISSION

PINION	1st:	2nd:
SPUR GEAR	1st:	2nd:

CLUTCH SETTINGS

SHOE	◯ STANDARD	◯ OPTIONAL
SPRING		
BELL CLEARANCE /mm		
BELL AXIAL PLAY /mm		

SHOCKS SETTINGS

	FRONT	REAR
SPRINGS		
OIL		
PISTON		
LENGHT /mm		
PRELOAD /mm		
REBOUND %		

ANTI-ROLL BAR

FRONT	
REAR	

ARM BUSHES ORIENTATION

5	+ 0.5mm - 0.5mm	
10	+ 1.0mm - 1.0mm	
15	+ 1.5mm - 1.5mm	

BATTERY MOUNT

◯ STANDARD ◯ BRASS

ENGINE MOUNT
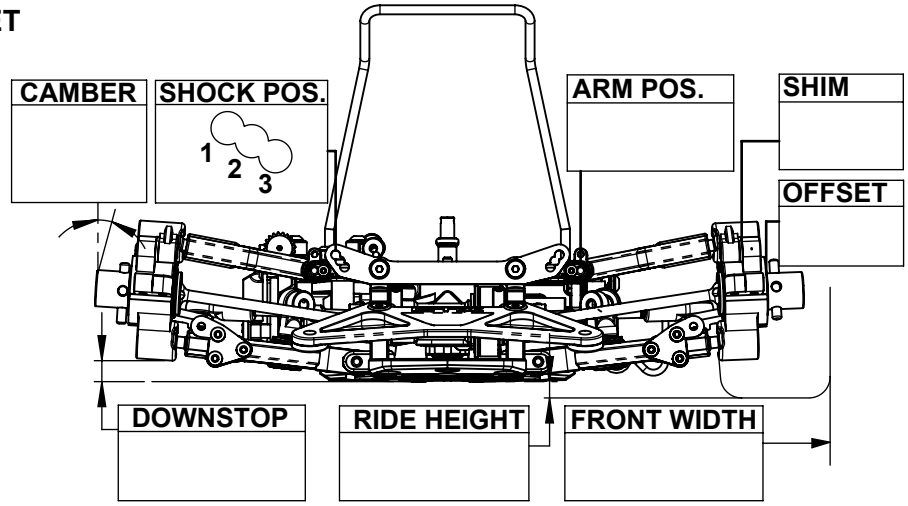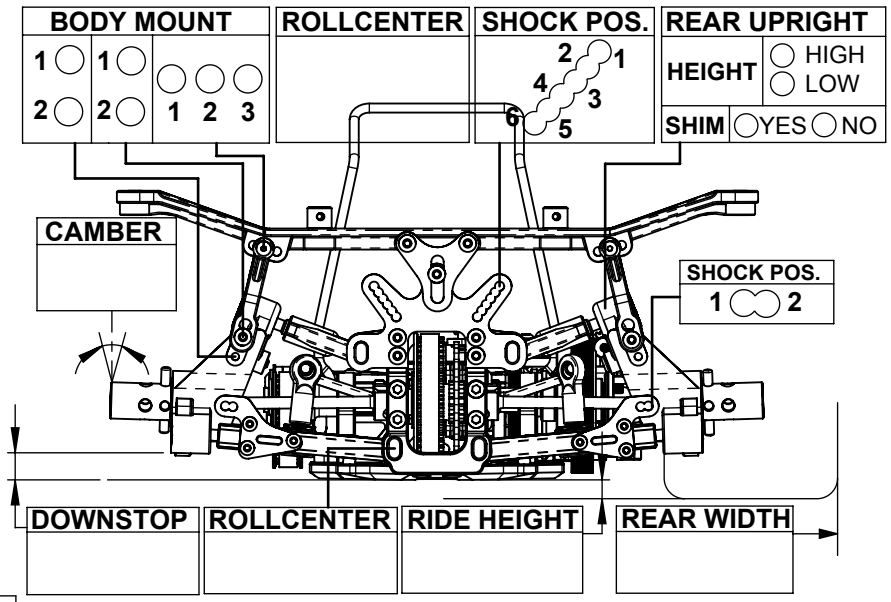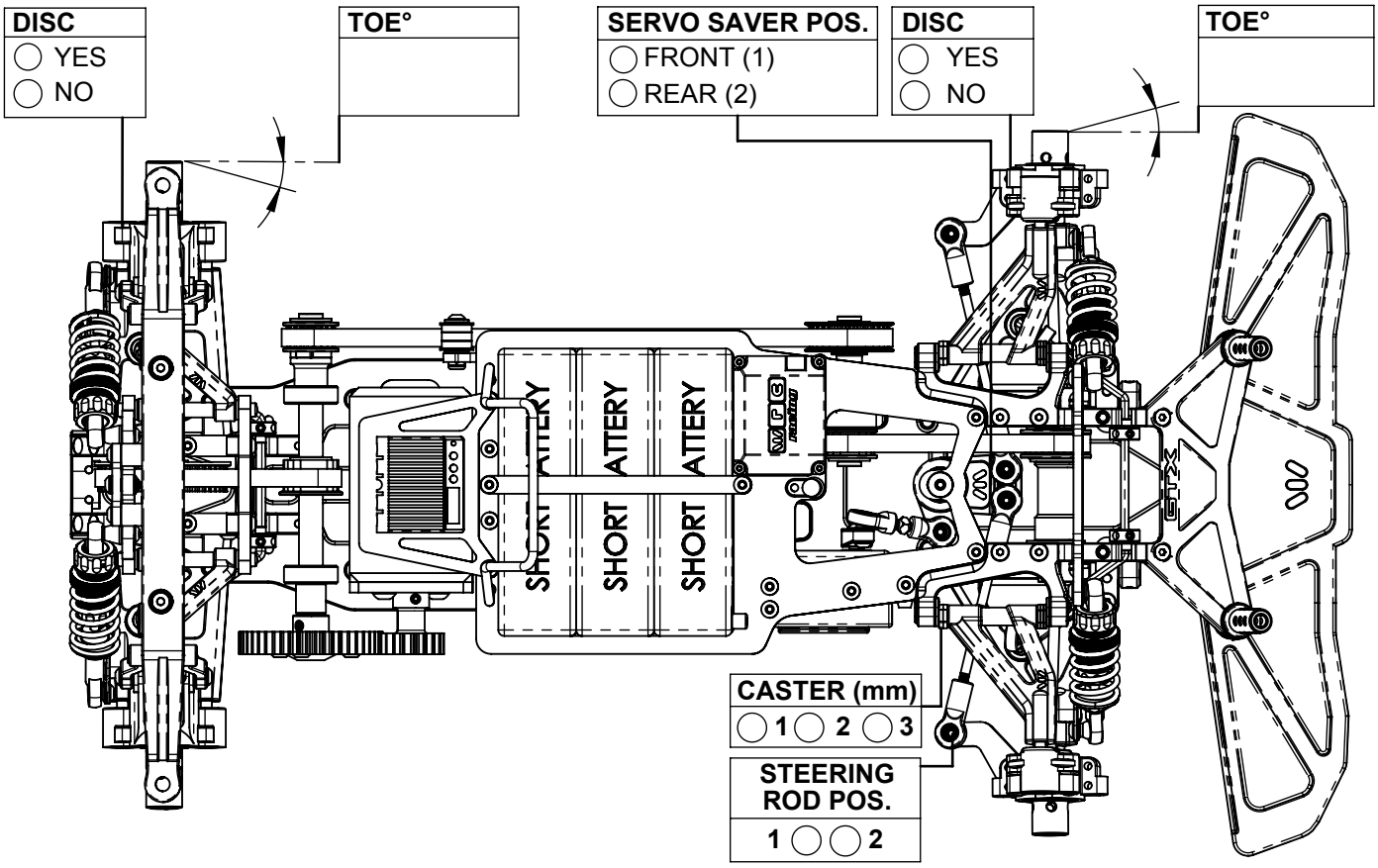
◯ STANDARD ◯ BRASS